12 Volt Airplane Ride-On Vehicle

Parent and Rider Manual

STOP!

DO NOT RETURN TO STORE

This product cannot be returned for a refund after it has been unpacked and used.

Call us Toll-Free at 1-866-204-9737 or for assistance and information from our trained staff.

For product related questions or custom service needs please email info@hypertoys.com

VISIT US ONLINE@
www.hypertoys.com

CAUTION-CHARGER IS A ELECTRONICALLY OPERATED PRODUCT: Not recommended for children under 3 years of age. As with all electric products, precautions should be observed during handling and use to prevent electric shock.

CAUTION-ELECTRIC TOY:
NOT RECOMMENDED FOR CHILDREN UNDER 3 YEARS OF AGE. AS WITH ALL ELECTRIC PRODUCTS, PRECAUTIONS SHOULD BE OBSERVED DURING HANDLING AND USE TO PREVENT ELECTRIC SHOCK.

⚠ WARNING:
RISK OF FIRE. DO NOT BYPASS.
TO REDUCE THE RISK OF INJURY, ADULT SUPERVISION IS REQUIRED.

NEVER USE IN ROADWAYS, NEAR MOTOR VEHICLES. NEVER USE ON OR NEAR STEEP INCLINES OR STEPS. NEVER NEAR SWIMMING POOLS OR OTHER BODIES OF WATER. ALWAYS WEAR SHOES.

NEVER ALLOW MORE THAN 1 RIDER.
MAX WEIGHT OF 66LBS. (30KG)
⚠ **CAUTION:** SCREWS CONTAIN SHARP POINTS AND EDGES. ADULT ASSEMBLY REQUIRED.

⚠ WARNING:
CHOKING HAZARD - THIS PACKAGE CONTAINS SMALL PARTS. KEEP AWAY FROM CHILDREN UNTIL ASSEMBLED. THIS PRODUCT IS NOT INTENDED FOR CHILDREN UNDER 3 YEARS DUE TO AN INABILITY TO OPERATE SAFELY.

FOR ASSISTANCE WITH YOUR ASSEMBLY CALL:
1-866-204-9737 TOLL FREE

HYPER TOY CO

12 Volt Airplane Ride-On Vehicle

Parent and Rider Manual

With directions for assembly and operation

Please read this manual before assembly.
Remember to save your receipt.

MAX WEIGHT: 66 LBS. (30 KGS)
MAX RIDERS: 1
MAX SPEED: 3 KPH (1.86 MPH) FORWARD
2 KPH (1.25 MPH) BACKWARD
EASY PUSH-BUTTON OPERATION
12 VOLT BATTERY AND CHARGER INCLUDED
WORKS ON HARD SURFACES
CONTAINS LEAD ACID BATTERY

⚠ WARNING:
Assembly by an adult.

⚠ WARNING:
CHOKING HAZARD- Small parts.
Not for children under 36 months.

easy 1·2·3 ASSEMBLY

Adult Assembly Required

FOR ASSISTANCE WITH YOUR ASSEMBLY CALL:
1-866-204-9737 TOLL FREE

HYPER TOY CO

Table of Contents

Important Information	1
Safety, Warnings and Cautions	3
Riding Safely	4
Battery Charging	5-6
Using Controls	7
Parts	8-9
Assembly	10-13
Vehicle Care	14
Troubleshooting Guide	15
Limited Warranty	16

Important Information

- **ADULT ASSEMBLY REQUIRED.**
- The battery must be charged for 7 to 9 hours before first use.
  To start charging the battery before starting assembly, see Battery Charging and Installation Information on page 4.
- Instruct children on safe operation and driving rules before they take their first ride:
  - -only one rider at a time
  - -always wear shoes when riding the vehicle
  - -always wear your helmet.
  - -do not allow other children near the vehicle when riding
  - -do not place your hands, feet, or any part of your body, clothing, or other articles near moving parts while the vehicle is in operation
  - -do not sit on the rear end of seat,it could cause tip over. sit on the middle of seat when riding.
- California Proposition 65 Warning:This product contains or emits chemicals known to State of California to cause cancer and birth defects or other reproductive harm.
- Do not overload the vehicle or exceed the maximum weight capacity of 66lbs (30kg).

If you have questions please call 1-866-204-9737 toll free.

- **Please read this manual completely** for operation and safety information **before** using the toy. Keep these instructions for future reference.

NOTES:

Safety Warnings and Cautions

⚠WARNING: Electrical Hazard

RISK OF FIRE , DO NOT BYPASS.

- Only use 12V lead acid battery.
- Only use Input AC 100-120V, 50-60Hz, Output 12V 1000mA charger.
- Never modify the electrical system. Changes could cause a fire resulting in serious injury or death, and could also ruin the electrical system.
- The Battery can fall out and injure a child if the toy flips over.
- Never lift or carry the battery by the wires or connectors. This can damage the battery and possibly cause a fire resulting in serious injury or death, Always use the battery holder to carry it.
- The battery can be handled by adults only. The battery is heavy and contains sulfuric acid (electrolyte). Dropping the battery could cause serious injury.
- Children should never be allowed to charge the battery. Charging the battery must be done by adults only. The electricity involved in charging the battery could injure a child.
- The motors will get hot, handle carefully.
- Each time you charge the battery check the battery, charger, and their connectors for excessive wear or damage. Do not use the charger or the battery if damage or excessive wear is detected until you have replaced the worn or damaged parts.

⚠WARNING: Riding Hazard

To reduce te risk of injury, adult supervision is required.

- Never use in roadways, near motor vehicles.
- Never use on or near steep inclines or steps.
- Never near swimming pools or other bodies of water.
- Always wear shoes.
- Never allow more than 1 rider.
- Max weight of 66lbs.(30 kgs)

⚠WARNING: Battery Charger

Changes or modifications to this unit not expressly approved by the party responsible for compliance could void the user's authority to operate the equipment.

NOTE: This equipment has been tested and found to comply with the limits for a Class B digital device, pursuant to Part 15 of the FCC Rules. These limits are designed to provide reasonable protection against harmful interference in a residential installation. This equipment generates, uses and can radiate radio frequency energy and, if not installed and used in accordance with the instructions, may cause harmful interference to radio communications.

However, there is no guarantee that interference will not occur in a particular installation. If this equipment does cause harmful interference to radio or television reception, which can be determined by turning the equipment off and on, the user is encouraged to try to correct the interference by one or more of the following measures:

- Reorient or relocate the receiving antenna.
- Increase the separation between the equipment and receiver.
- Connect the equipment into an outlet on a circuit different from that to which the receiver is connected.

Consult the dealer or an experienced radio/TV technician for help.

⚠WARNING: Battery Charger

- When fully unassembled, this package contains small parts. Adult assembly is required.
- Use the charger in dry areas only.

Rider Saftey

⚠ WARNING: Adult Supervision Required

- Always Teach Safety First
- While most children can develop the physical skills necessary to operate this vehicle, it is important to remember that they do not yet have mature judgment skills. Children should never be allowed to ride this vehicle without adult supervision. Before any child rides this vehicle an adult must evaluate the child's skill levels and abilities to operate the vehicle safely. Even after instruction hazards are not always anticipated or recognized by children. So before any child operates the vehicle teach them appropriate safety rules.
- THERE IS NO SUBSTITUTE FOR DIRECT ADULT SUPERVISION.

⚠ WARNING: Safe Riding Rules

To reduce the risk of injury adult supervision is required.

- Always sit only on the seat in the vehicle.
- Always wear shoes.
- No more than one rider at a time.
- Do not operate on loose dirt, sand or gravel.
- Do not operate near drop-offs, obstructions, swimming pools or other bodies of water.
- Do not operate in roadways, on the street or near motor vehicles.
- Do not operate on or near steep inclines or steps. Use on generally level ground only.
- Do not opoerate in the dark as unexpected obstacles could cause an accident.
- Do not operate on slopes. The vehicle may accelerate or roll backwards at unsafe speeds even if the pedal is released.
- Do not place anything near moving parts such as motors, gears or wheels. Rotating parts can snag hair, fingers, etc. causing serious injury.
- Do not operate near flammable vapors (such as gasoline, paint thinner, acetone, liquid wax, etc.).
- Electrical components can produce an internal spark when first turned on or off. Using the vehicle near flammable liquids or vapors could cause an expolsion or fire resulting in serious injury or death.

Battery Charging Instructions

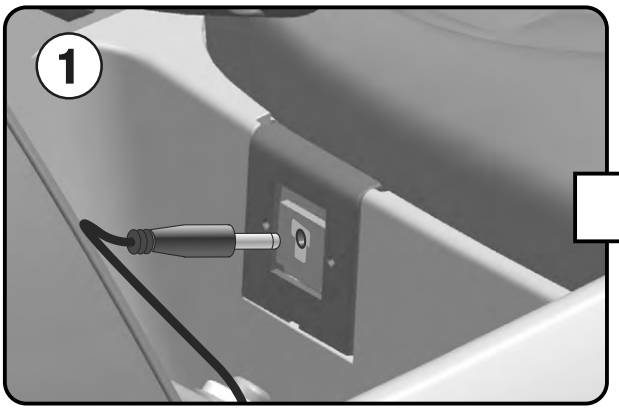

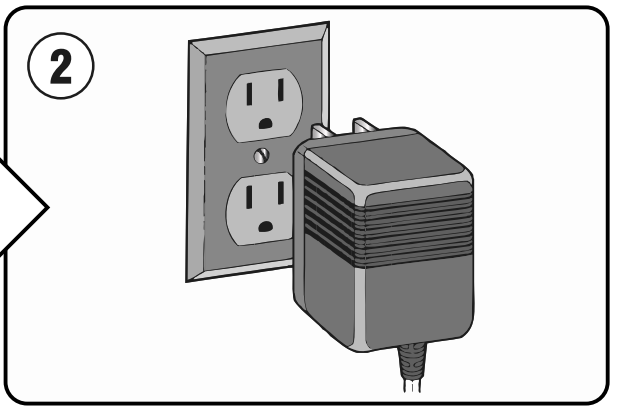

1. Locate the charger port on the charger provided with vehicle. Plug in the provided charger port into the input socket below the seat. Only charge this vehicles battery with provided charger.

2. Plug the charger plug into a wall outlet. The battery will begin charging.

This battery powered vehicle has been fully charged from the factory, nevertheless the battery must be charged for 7 - 9 hours before first use to ensure sufficient electric power. Re-charge the battery immediately after each ride for 4 - 6 hours to ensure sufficient battery power. Also recharge the battery when not in use every 30 days thereby extending battery life.

When this battery powered vehicle runs at a rate slower than the normal speed, re-charge immediately. To prolong battery life you must recharge the battery after each use. You must also charge your battery if it has not been used for 30 days or more to maintain battery life.

Note: Remember to only re-charge the battery for 4 - 6 hours.

Battery Charging Instructions

- When the battery runs out of electricity it must be charged immediately. Leaving the battery uncharged for too long will shorten it's life.
- Even when the battery is not in use it should be charged at least once a month.
- During the charging process the battery charger or battery may feel slightly heated, if not the charger set, battery, or fuse has malfunctioned and my need to be replaced.
- Any continued charging process must not exceed 16 hours.

⚠ WARNING FOR LEAD/ACID BATTERY

- Do not mix alkaline and standard (carbon/zinc) or rechargeable (Ni-Cd) batteries.
- Please keep battery and charging kit away from anything flammable during battery charging.
- Batteries must always be inserted or connected with correct negative and positive polarity.
- Only use battery and charger kit specified by the manufacturer.
- Never dismantle battery or battery charger kit.
- Never place battery or battery charger kit in fire.
- Transformers or battery chargers used with this toy need to be regularly examined for damage to charger cord, connections or enclosures. If damaged call customer service at 1-866-204-9737.

Battery Trouble Shooting

- When this vehicle is in use and does not move when powered wait for 1 - 3 minutes for the battery to recover.
- If after waiting 1 - 3 minutes and the vehicle still does not move when powered first check all connections. Make sure they are fully connected in the secure position.
- If this does not correct the problem the battery is most likely out of order. Please call customer service at 1-866-204-9737.

Using Controls

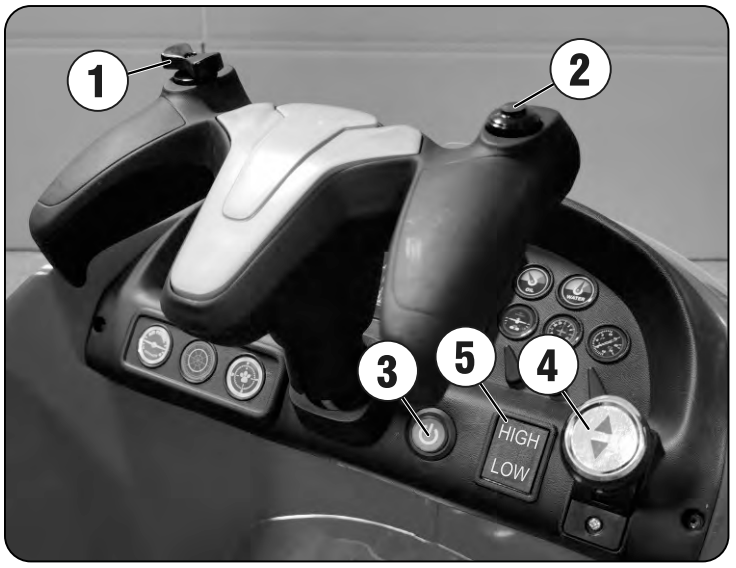

1. Propeller Button: press the button to turn the propeller.
2. Horn Button: press the button to play the horn.
3. Power Button: turn on or off the power of the product.
4. Forward / Backward Button: control the moving direction of the product to forward or backward; Intermediate button is stop.
5. High and Low Speed Button: switch the high and low speed.

6. Accelerator Pedal: with foot push down on the accelerator pedal to move the vehicle. Release foot from the accelerator pedal to make the vehicle brake slowly.

Parts

Parts Diagram

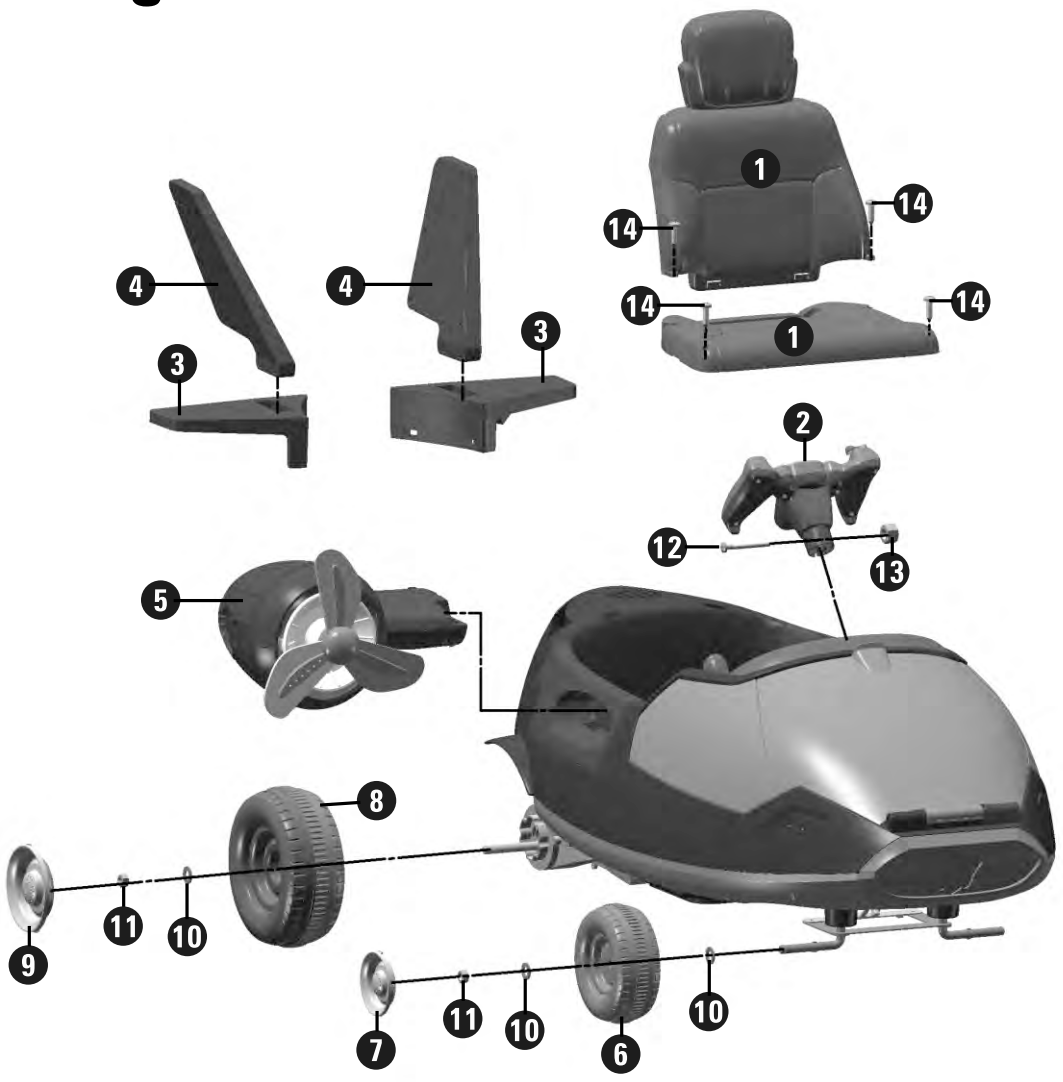

Note: Some parts are installed on both left and right sides of the vehicle.

Parts

Parts List

PART NO.	PART NAME	Q'ty (pcs)	REMARKS
1	Seat	1	
2	Steering Wheel	1	
3	Horizontal Stabilizer	2	
4	Vertical Stabilizers	2	
5	Propellers	2	
6	Front Wheels	2	
7	Front Wheel Caps	2	
8	Rear Wheel	2	
9	Rear Wheel Caps	2	
10	ø12 Washers	6-8	
11	M10 Nut	4	Secures Wheels
12	M5 Screw	1	Secures Steering Wheel
13	M5 Nut	1	Secures Steering Wheel
14	M4x12 Screws	5	Secures Seat

2 Spanner Wrenches
Included

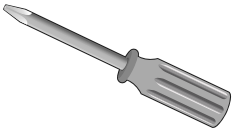

Phillips Screwdriver
Not Included

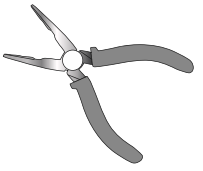

Long Nose Pliers
Not Included

Step 1: Install Wheels

Install Front Wheels

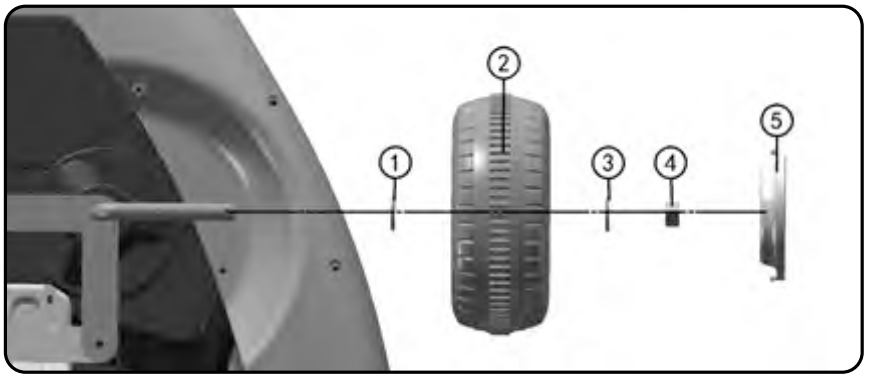

Tools required: Spanner

1. Carefully place the vehicle upside down on a flat surface.
2. Place a ø12 washer onto the front axle.
3. Install the front wheel onto front axle.
4. Place another ø12 washer onto the front axle.
5. Place M10 nut onto front axle and tighten with provided spanner wrench.
6. Install the front wheel cap, push down until front wheel cap tabs “click” securely onto front wheel.
Repeat these steps on the opposite side.

Install Rear Wheels

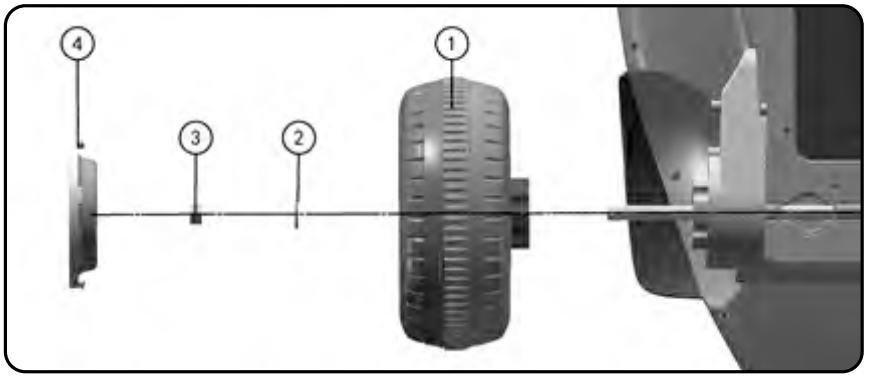

x2

Tools required: Spanner

1. Carefully place the vehicle upside down on a flat surface.
2. Install the rear axle into the electric drive motor axle hole, slide axle through car body.
3. Install the rear drive side wheel onto rear axle, align push together back of wheel drive gear with the electric drive motor slot.
4. Place ø12 washer onto the rear axle and then M10 nut tighten slightly.
5. Repeat the above steps above on opposite side and tighten M10 nuts with the two provided spanner wrenches.
6. Install the rear wheel caps, push down until rear wheel cap tabs “click” securely onto rear wheel.

Step 2: Install Steering Wheel and Propellers

Install Steering Wheel

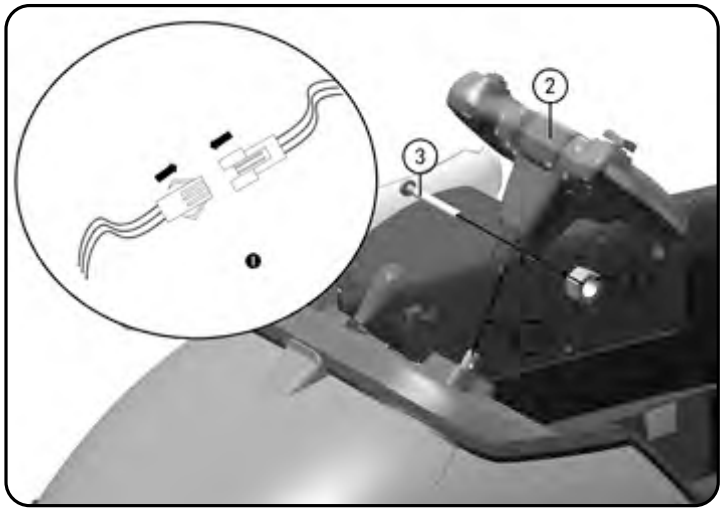

1. Connect the music plug-in on the steering wheel with the music plug-in beside the steering rod, and then place the plug-in into the hole under the steering rod of the dashboard.
2. Insert the steering wheel into the end of the steering rod.
3. Align the hole on the steering wheel with the hole on the steering rod, and insert the M5 screw. Secure steering wheel with nut M5 nut on the other side.

Install Propellers

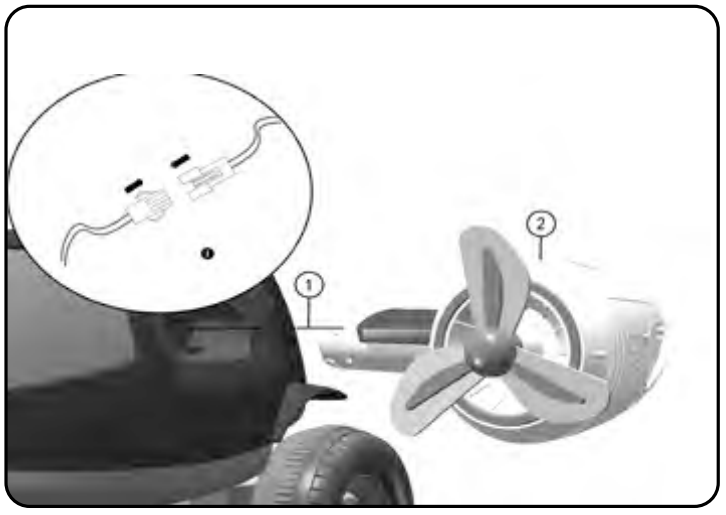

1. Connect the propeller wires with the body wires and insert the wires harness into the propeller.
2. Insert the propeller into the body. Repeat this step to install the propeller on the opposite side.

Step 3: Install Rear Vertical & Horizontal Stabilizers

Install Rear Wing

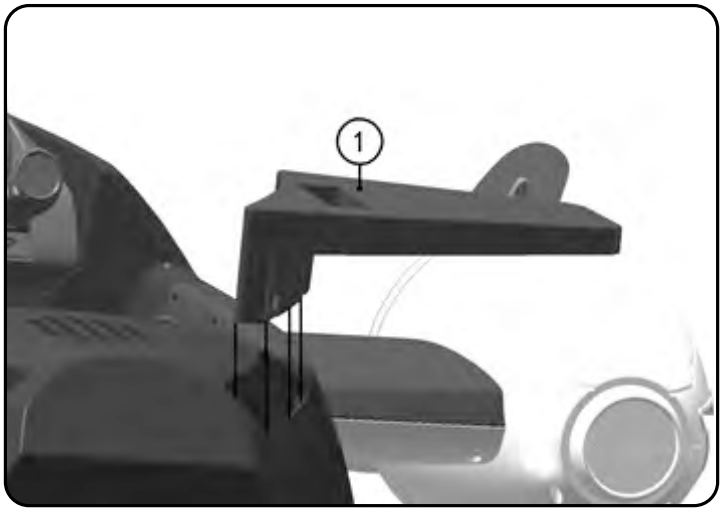

1. Insert the horizontal stabilizer into the body slot. Repeat this step to install the horizontal stabilizer on the opposite side.

Install Rear Fin

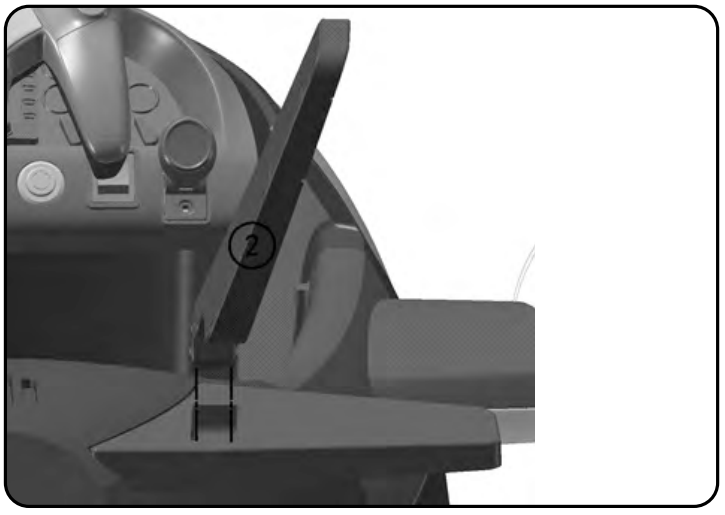

2. Insert the vertical stabilizer into the slot of tail wing. Repeat step to install the vertical stabilizer on the other side.

Step 4: Connect Power Supply and Install Seat

Connect Power Supply

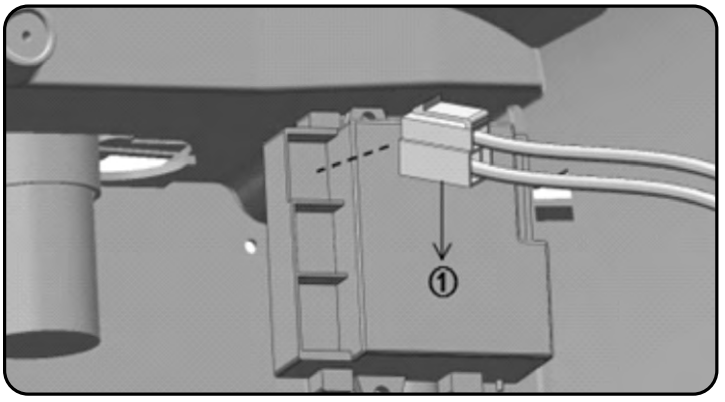

1. Find the main power wire and connect the plug of the power wire into the corresponding slot on the receiver.

Install Seat

1. Insert the lower cover of seat cushion into the slot of body.
2. Secure seat with M4x12 screws.
3. Insert the cover of the seat cushion into the slot of cover under the seat cushion.
4. Secure seat cushion with M4x12 screws.

Vehicle Care

⚠ATTENTION! Adult supervision is always required while this vehicle is being operated, battery re-charged, assembled, or repaired.

- ☑ Check all screws, nuts, and protective coverings regularly and tighten securely.
- ☑ Check all plastic parts on a regular basis for cracks or broken pieces.
- ☑ Never use this battery powered vehicle near water or in wet weather conditions such as rain and snow.
- ☑ Never change gears with the shift lever while vehicle is still in motion. Always come to a complete stop then use shift lever to change gears.
- ☑ Never operate this vehicle in mud, sand, loose dirt, or gravel. This can cause the electric switches and motor to fail.
- ☑ Never wash this battery powered vehicle with soap and water, this can cause the electric parts of the vehicle to fail. To clean this vehicle only use a non-wax furniture polish applied to a soft micro-fiber soft cloth.
- ☑ Always store vehicle inside or under a protective cover.
- ☑ Always re-charge this vehicles battery 4 - 6 hours every month while not in regular use to extend the life of the battery.

Troubleshooting Guide

Problem	Possible Cause	Solution
Vehicle does not run	Battery low on power	Recharge battery.
	Thermal fuse has tripped	Reset fuse, see <Fuse>
	Battery connector or wires are loose	Check that the battery connectors are firmly plugged into each other. If wires are loose around the motor ***contact customer service.***
	Battery is dead	Replace battery, ***contact customer service.***
	Electrical system is damaged	***Contact customer service.***
	Motor is damaged	***Contact customer service.***
Vehicle does not run very long	Battery is under charged	Check that the battery connectors are firmly plugged into each other when recharging
	Battery is old	Replace battery, ***contact customer service.***
Vehicle runs sluggishly	Battery low on power	Recharge battery, ***contact customer service.***
	Battery is old	Replace battery, ***contact customer service.***
	Vehicle is overload	Reduce weight on vehicle. Maximum user weight is 30kg.
	Vehicle is being used in harsh conditions	Avoid using vehicle in harsh conditions ,see <Safety>.
Vehicle needs a push to go forward	Poor contact of wires or connectors	Check that the battery connectors are firmly plugged into each other. If wires are loose around the motor, ***contact customer service.***
	"Dead Spot" on motor	A dead spot means the electric power is not being delivered to the terminal connection and the vehicle needs repair. ***Contact customer service.***
Difficult shifting from forward to reverse or vice-versa	Attempting to shift while the vehicle is motion	Completely stop the vehicle and shift, see <Using Controls>.
Loud grinding or clicking noises coming from motor or gear box	Motor or gears are damaged	***Contact customer service.***
Battery will not recharge	Battery connector or adapter connector is loose	Check that the battery connectors are firmly plugged into each other.
	Charger not plugged in	Check that the battery charger is plugged into a working wall outlet.
	Charger is not working	***Contact customer service.***
Charger feels warm when recharging	This is normal and not a cause for concern	

Limited Warranty

DON'T RETURN YOUR VEHICLE TO THE STORE

Do not take back to store, call customer service with any problems or questions.

Hyper Toy Company offers the following limitations, terms and conditions to the original owner of the Hyper Toy Company electric Ride-On Toy. Should this Hyper Toy Company electric Ride-On toy or an part be determined defective by Hyper Toy Company to be covered by this Limited Warranty, it will be repaired or replaced, at Hyper Toy Company sole option, which will be conclusive and binding. Under no circumstances does this limited warranty include the cost of travel or shipment to and from any retailer or consumer. Such cost, if any, shall be borne by the original or subsequent owner.

This Hyper Toy Company electric ride-on toy has not been designed or engineered for ramp riding, jumping, aggressive riding, in severe climates or over severe terrain, riding with heavy loads of over (66 lbs or 30 kgs) or any similar activities. Such uses may damage the Hyper Toy Company electric ride-on toy, that can cause serious injury to the rider and in all cases will void this warranty.

<u>6 Months from the date of the purchase on vehicle</u>
Hyper Toy Company Electric Ride-On display, throttle and throttle assembly, control wiring harness, wiring and wiring harness, motor and associated transmission and all components not directly associated with the 6V battery are warranted from 6 months from date of purchase to The Original Purchaser against any defects in material, manufacturing, and/or workmanship. If there is any evidence of consumer repair the warranty is voided. Any claim of damage under this clause cannot be due to owner abuse or neglect and must first be reported to Hyper Toy Company Customer Service and a Return Merchandise Authorization (RMA) tag to be issued. Wheels are considered a wear and tear item and are only under warranty in the event of manufacturer defect.
Items not covered under warranty terms under any conditions.
1. Damage due to failure to maintain the battery as accurately described on various product warning stickers and the products owner's manual.
2. Damage due to maintenance or the actual damage caused by the lack of maintenance.
3. Damage due to improperly assembled products.
4. Damage due to climatic or environmental damage, various cleaners and/or chemicals that may result in damage to the finish.

This warranty does not cover and is intended to exclude, any liability on the part of Hyper Toy Company. Whether under this warranty or implied by law or indirect or consequential damages for breach of warranty.

This warranty gives you specific legal rights. You may also have other rights that vary from state to state and province to province. In those states that do not allow the exclusion of implied warranties or limitation of incidental or consequential damages, the above limitations or exclusions may not apply to you. This warranty applies to the United States and Canada.

DON'T RETURN YOUR VEHICLE TO THE STORE. Should you require service or assistance with your vehicle during the warranty period, contact our trained technical staff at Hyper Toy Company 1-866-204-9737.

NOTES:

Product Registration

Note:

Activation of your warranty gives you FREE telephone and online technical service help. Please visit www.hypertoys.com to complete product registration and activate your warranty. You will need to provide the product serial number to complete registration. You will be able to find the product serial number on the underside of the vehicle.

Hyper Toy Company
Customer Service Contact:
177 Malaga Park Dr.
Malaga, NJ 08328
Call Toll Free
1-866-204-9737
Monday-Friday 8:00AM to 5:00PM (CST)

For product related questions or customer service needs please email info@hypertoys.com

VISIT US ONLINE@
www.hypertoys.com

CAUTION-ELECTRIC TOY:
NOT RECOMMENDED FOR CHILDREN UNDER 3 YEARS OF AGE. AS WITH ALL ELECTRIC PRODUCTS, PRECAUTIONS SHOULD BE OBSERVED DURING HANDLING AND USE TO PREVENT ELECTRIC SHOCK.

⚠ WARNING:
RISK OF FIRE. DO NOT BYPASS.
TO REDUCE THE RISK OF INJURY, ADULT SUPERVISION IS REQUIRED.

NEVER USE IN ROADWAYS, NEAR MOTOR VEHICLES. NEVER USE ON OR NEAR STEEP INCLINES OR STEPS. NEVER NEAR SWIMMING POOLS OR OTHER BODIES OF WATER. ALWAYS WEAR SHOES.

NEVER ALLOW MORE THAN 1 RIDER.
MAX WEIGHT OF 66LBS. (30KG)
⚠ **CAUTION:** SCREWS CONTAIN SHARP POINTS AND EDGES. ADULT ASSEMBLY REQUIRED.

⚠ WARNING:
CHOKING HAZARD - THIS PACKAGE CONTAINS SMALL PARTS. KEEP AWAY FROM CHILDREN UNTIL ASSEMBLED. THIS PRODUCT IS NOT INTENDED FOR CHILDREN UNDER 3 YEARS DUE TO AN INABILITY TO OPERATE SAFELY.

FOR ASSISTANCE WITH YOUR ASSEMBLY CALL:
1-866-204-9737 TOLL FREE

HYPER TOY CO